


aerospace
climate control
electromechanical
filtration
fluid & gas handling
hydraulics
pneumatics
process control
sealing & shielding

# Industrial Refrigeration Defrost Solutions ™ Package

Brochure R-222

Parker

ENGINEERING YOUR SUCCESS.

# Defrost Solutions ™ Dual Position Valves

Designed to eliminate the damaging effects of hydraulic shock caused by liquid deceleration, vapor propelled liquid slugs, and condensation induced hydraulic shock, the S4AD, CK-2D, and CK-6D combine the features of hot gas/soft gas valve configurations, and suction stop with equalization valve configurations. The S4AD can additionally be used for high pressure liquid make up applications to prevent liquid hammer, replacing parallel liquid line solenoid valves. Up to 16% can be saved on installation and material costs, when Defrost Solutions™ dual position solenoid valves are used in place of conventional parallel valve configurations.

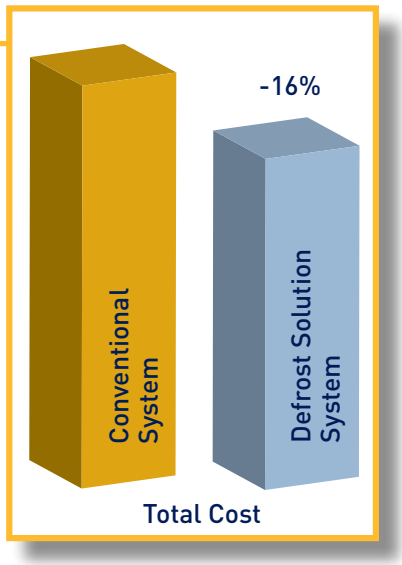


## S4AD

### Dual Position Solenoid Valve

- Helps prevent the damaging effects of vapor propelled liquid
- Combining hot gas/soft gas solenoid valves or parallel liquid line valves reduces installation costs and potential leak paths
- Integrated S6A pilot Solenoids
- Meets NEMA 3R and NEMA 4 Requirements
- Maximum Rated Pressure: 400 psig (27.6 bar)
- Normally closed design
- Suitable for use as a liquid solenoid valve, hot/soft gas, or suction stop with equalization valve in temperature ranges of -45°C to 105°C (-50F to 220°F)



# CK-2D

## Dual Position Gas Powered Suction Stop Valve

- Economical solution to evaporator equalization following a defrost cycle
- Combining equalization and suction stop functions reduces installation costs and potential leak paths
- Integrated S6A pilot solenoids
- Vertical or horizontal orientation
- Maximum Rated Pressure: 400 psig (27.6 bar)
- Low pressure drop, normally open design for suction line applications
- Meets NEMA 3R and NEMA 4 Requirements

# CK-6D

## Dual Position Gas Powered Suction Stop Valve

- Economical solution to evaporator equalization following a defrost cycle
- Combining equalization and suction stop functions reduces installation costs and potential leak paths
- In the event of a mechanical or electrical failure during a defrost cycle, the integrated A2D pressure pilot holds the valve in the equalizing position until a safe coil pressure is reached
- Integrated S6A pilot solenoids
- Maximum Rated Pressure: 400 psig (27.6 bar)
- Low pressure drop, normally open design for suction line applications
- Meets NEMA 3R and NEMA 4 Requirements

# Defrost Solutions ™ Valves

## Principles of Operation for a Normally Open Dual Position Valve (CK-2D Shown)

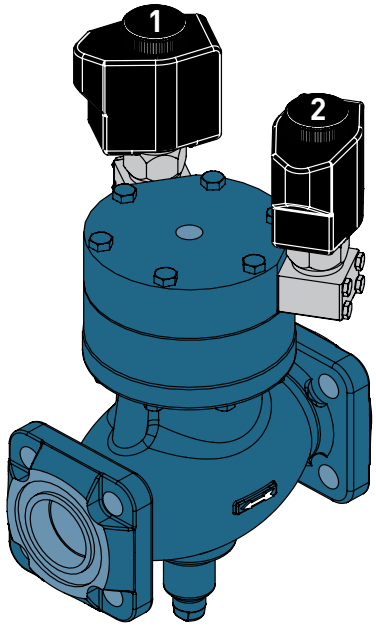


The CK-2D and CK-6D are low pressure drop, gas-powered suction stop valves, for low temperature ammonia, approved CFC, HCFC, or HFC refrigerants and corresponding approved refrigerant oils or fluids. The CK-2D and CK-6D are normally open valve, which uses discharge gas to power the valve closed. The CK-6D incorporates a fail safe feature, which holds the valve in the equalizing position until a safe coil pressure is reached, should a power failure occur during the defrost cycle.

The valve position is controlled via the sequencing of two integral pilot solenoids and can be held in a closed, partially open (approximately 10% of full flow) or fully open position. By sequencing the solenoids based on time, users have the flexibility to set each stage to meet their specific needs.

Incorporating the equalizing feature into the suction stop valve, installation costs and potential leak paths are minimized by reducing the total number of valves being installed.

**Sequence of operation for normally open dual position Defrost Solutions ™ valves:**

***Position 1:*** When solenoid coil #1 is energized, along with solenoid coil #2, the supplied high pressure gas will be routed through passages (A) and (B), filling the chambers above the secondary and primary pistons. This allows the secondary piston to move down until it contacts the internal stop, and the primary piston to compress the return spring and firmly seat, closing the valve. Passage (C) is now closed off by the secondary piston which limits the flow of high pressure gas from the primary piston chamber through passage (C).

***Position 2:*** When the valve goes into the equalization mode, solenoid coil #1 is de-energized, but solenoid coil #2 remains energized. This eliminates the flow of high pressure gas through passage (B), and allows the remaining high pressure gas in the primary piston chamber to escape through the bleed hole machined into the primary piston, allowing the force of the return spring to overcome the pressure above the primary piston. The primary piston then moves up to the bottom of the secondary piston allowing the system equalization to occur. At this stage, the valve will have the flow rate similar to that of a 1" valve, regardless of the main port size.

***Position 3:*** When fully opening the valve from the equalization mode, solenoid coil # 1 is finally de-energized, eliminating the flow of high pressure gas through passage (A), and allowing the remaining high pressure gas from the secondary piston chamber to escape around the secondary piston and through passage (C). This allows the spring force to overcome the pressure above the secondary piston and fully open the valve.

For more information on the CK-2D, CK-6D and the S4AD see bulletins 50-24, 50-25, and 30-95 respectively.

**Valve Piston Position via Coil State**

| Coil | State | CK-2D | CK-6D | S4AD* |
|---|---|---|---|---|
| 1 | De-energized | Fully Open | Fully Open | Fully Closed |
| 2 | De-energized | | | |
| 1 | Energized | Fully Closed | Fully Closed | Fully Open |
| 2 | Energized | | | |
| 1 | De-energized | Equalize | Equalize | Equalize |
| 2 | Energized | | | |

* The S4AD is a normally closed dual position solenoid valve

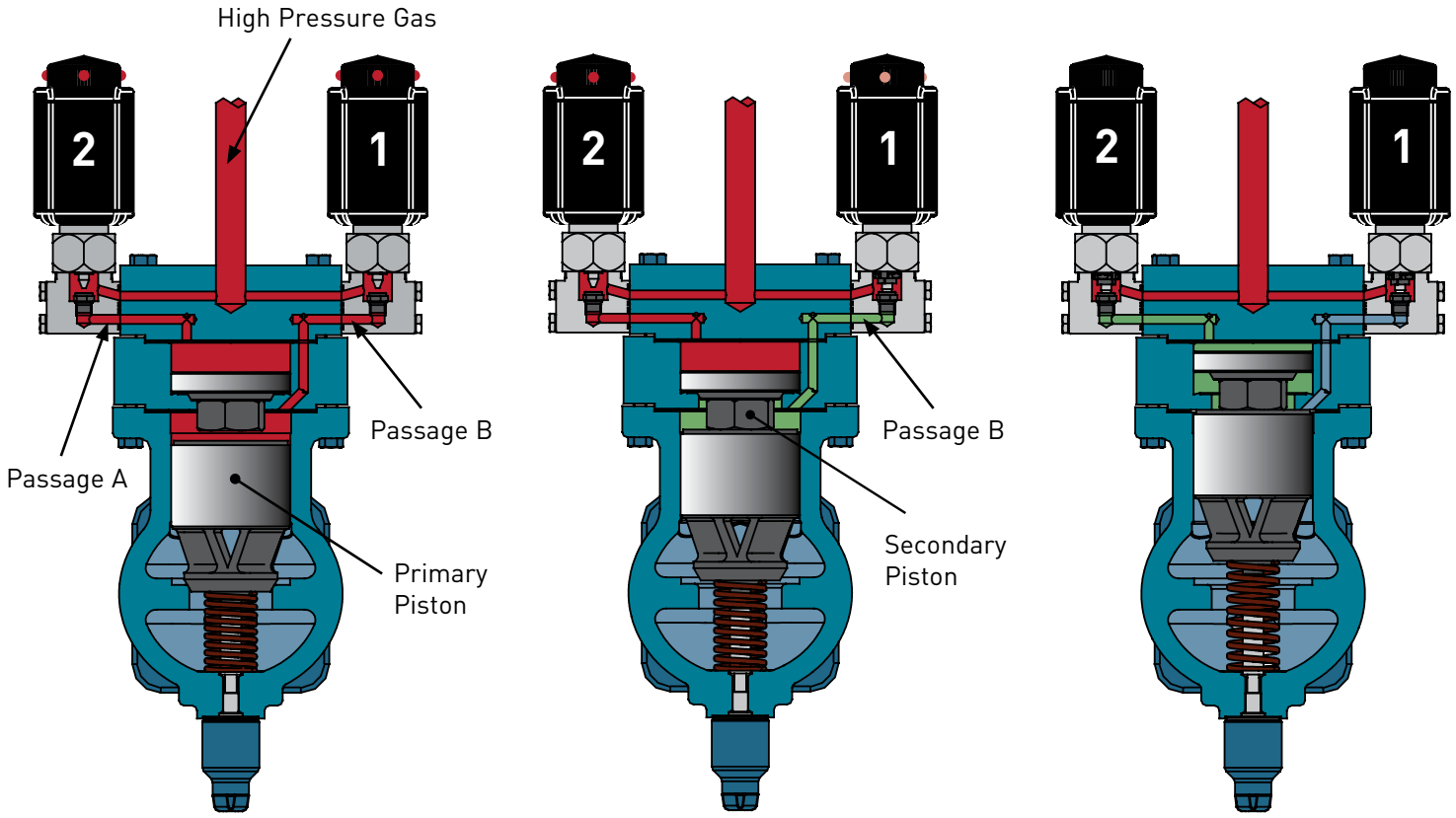


**Position 1:** Fully Closed **Position 2:** Equalize **Position 3:** Fully Opened

**Figure 1:** CK-2D Principles of Operation Inlet Cross-Sectional View (Direction of flow is into the page)

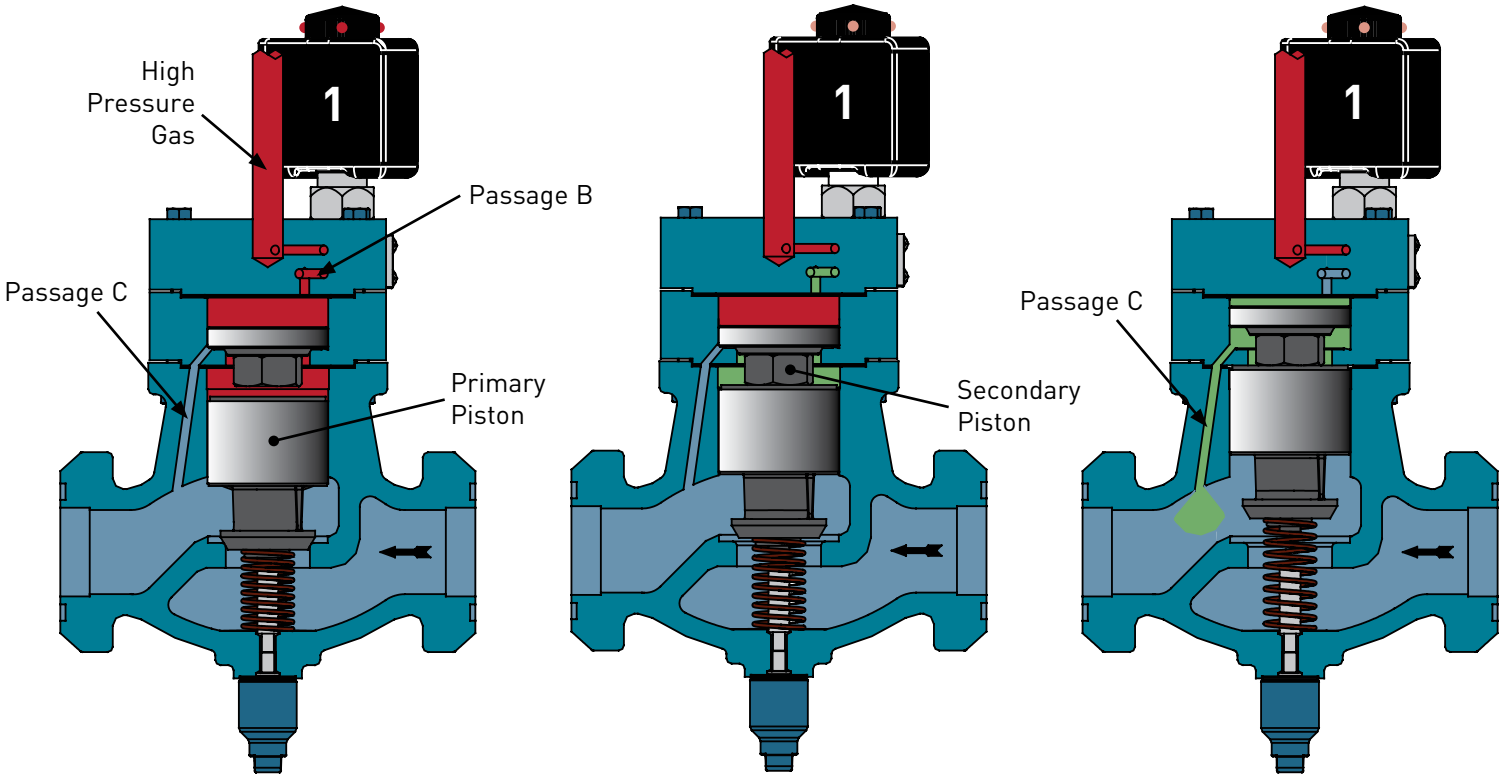


**Position 1:** Fully Closed **Position 2:** Equalize **Position 3:** Fully Opened

**Figure 2:** CK-2D Principles of Operation Side Cross-Sectional View

# Defrost Controller

## Product Information, Features, and Defrost Cycle


### Product Description

The Refrigerating Specialties defrost controller is a powerful, yet user friendly, device for controlling the sequence of events that occur during system defrost cycles. The controller may be applied to both industrial and commercial refrigeration systems, and is suitable for use on hot gas, electric, or water defrost applications.

### Product Features

- Digital display
- Wide range of programmable features
- Easily upgradable to new versions of software
- Three selectable defrost initiation and termination modes
- Real time 24 hour digital clock
- 30 day time/date/day retention after power failure
- Weekend/holiday energy-saving schedules
- Settings stored indefinitely in nonvolatile memory
- Operating temperature range 5°F to 120°F (-20°C to 50°C)
- UL/CSA/CE Approval

### Basic Operating Modes

The Refrigerating Specialties defrost controller operates in any of the three basic modes below.

***Normal Operation:*** Defrost cycles occur according to any of the initiation and termination modes.

*Initiation modes:* 24 hour / constant interval, constant interval, exact time, liquid feed time, remote, 24 hour / constant / remote, constant remote, or exact remote.

*Termination modes:* Time, time / temperature, or time remote

***Weekend Operation:*** Allows the user to specify a special schedule to occur once each week for 1-3 days. At the end of the weekend, the normal schedule resumes. Weekend operation only works in conjunction with 24 hour / constant interval initiation.

***Holiday Operation:*** Allows the user to specify a holiday schedule that occurs one-time only for a period of one to six days. At the end of the holiday schedule, either the normal or weekend Schedule will resume, depending on the day of the week. Holiday operation observes the defrost frequency programmed for weekend operation.

Within each of these operating modes, the controller will initiate or terminate defrost cycles based on a variety of criteria.

**Defrost Cycle**

The Refrigerating Specialties defrost controller will go through the following sequence when initiating a defrost cycle.

***Pump Out Cycle:*** This prepares the evaporator for defrost by allowing the liquid refrigerant in the evaporator to be pumped or drained out through the suction line. The length of this pump out cycle is user defined, and can vary from 1 to 30 minutes.

***Soft Gas Cycle (optional):*** The soft gas cycle reduces the likelihood of damaging pressure shocks on the evaporator coil. The length of this soft gas cycle is user defined, and can vary from 0 to 15 minutes.

***Hot Gas Cycle:*** The length of the hot gas cycle is user defined, and can vary from 1 to 45 minutes. This cycle may also be terminated before the time expires by an analog temperature measurement that has reached its pre-set limit, or a closed remote contact.

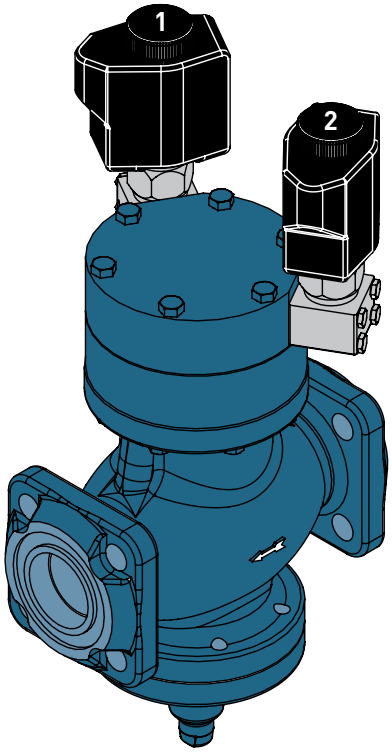


**Figure 3:** S4AD Dual Position Hot Gas Solenoid Valve

***Equalization Cycle:*** The equalization phase can reduce or eliminate system disruptions and sudden compressor loading caused by warm refrigerant being quickly released into the system, as well as a reduction of vapor propelled liquid. The length of this equalization cycle is user defined, and can vary from 1 to 60 minutes.

***Fan Delay Cycle:*** This allows any remaining droplets of water on the evaporator coil to freeze, so they are not blown into the refrigerated space upon fan start up. The length of the fan delay is user defined, and can vary from 1 to 5 minutes.

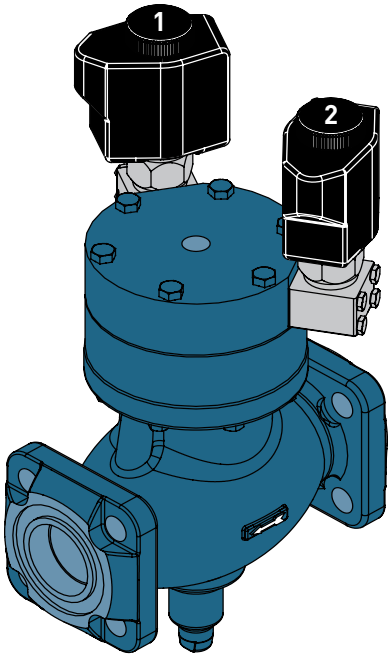


**Figure 4:** CK-2D Dual Position Gas Powered Suction Stop Valve

For more defrost controller technical and programming information please see bulletin 90-00, available on the Parker web site:

**www.parker.com/refspec**

# Defrost Solutions ™ Liquid Recirculation Hot Gas Defrost, Top Feed

## Defrost Controller Wiring Diagram

In the bottom fed liquid recirculation hot gas defrost system shown, the suction stop solenoid valve and defrost relief regulator with electric wide opening have been replaced with one dual position gas powered suction stop solenoid valve and a defrost relief regulator. The hot gas and soft gas solenoid valves have been replaced with one dual position hot gas solenoid valve. When the system is in defrost, the hot gas will flow through the piping in the drain pan, and into the inlet of the evaporator coil. Since the dual position gas powered suction stop solenoid valve and liquid solenoid valve have been fully closed by the defrost controller, the hot gas will flow through the evaporator coil passing through the defrost relief regulator. The hot gas will then be routed downstream of the dual position gas powered suction stop solenoid valve.

***The Refrigerating Specialties Defrost Controller will go through the following sequence when initiating a defrost cycle.***

**Pump Out Cycle:** The first cycle consists of de-energizing the solenoid coil on the liquid line solenoid valve, closing it.

**Soft Gas Cycle:** In the second cycle, the evaporator fans are turned off and both solenoid coils #1 and #2 are energized on the dual position gas powered suction stop solenoid valve, causing it to fully close. Then the soft gas is initialized by energizing solenoid coil #2 on the dual position hot gas solenoid valve.

**Hot Gas Cycle:** The third cycle begins the full flow of hot gas by energizing solenoid coils #1 and #2 on the dual position hot gas solenoid valve, causing it to fully open.

**Equalization Cycle:** In the fourth cycle both solenoid coils #1 and #2 on the dual position hot gas solenoid valve are de-energized, causing the valve to fully close. Then solenoid coil #2 on the dual position gas powered suction stop solenoid valve is energized, starting the equalization cycle.

**Fan Delay Cycle:** In the final cycle, both solenoid coils #1 and #2 are de-energized on the dual position gas powered suction stop solenoid valve, causing it to fully open. The liquid solenoid valve is opened, resuming refrigeration. Once the time has expired for the user defined fan delay, the fans will resume operation.

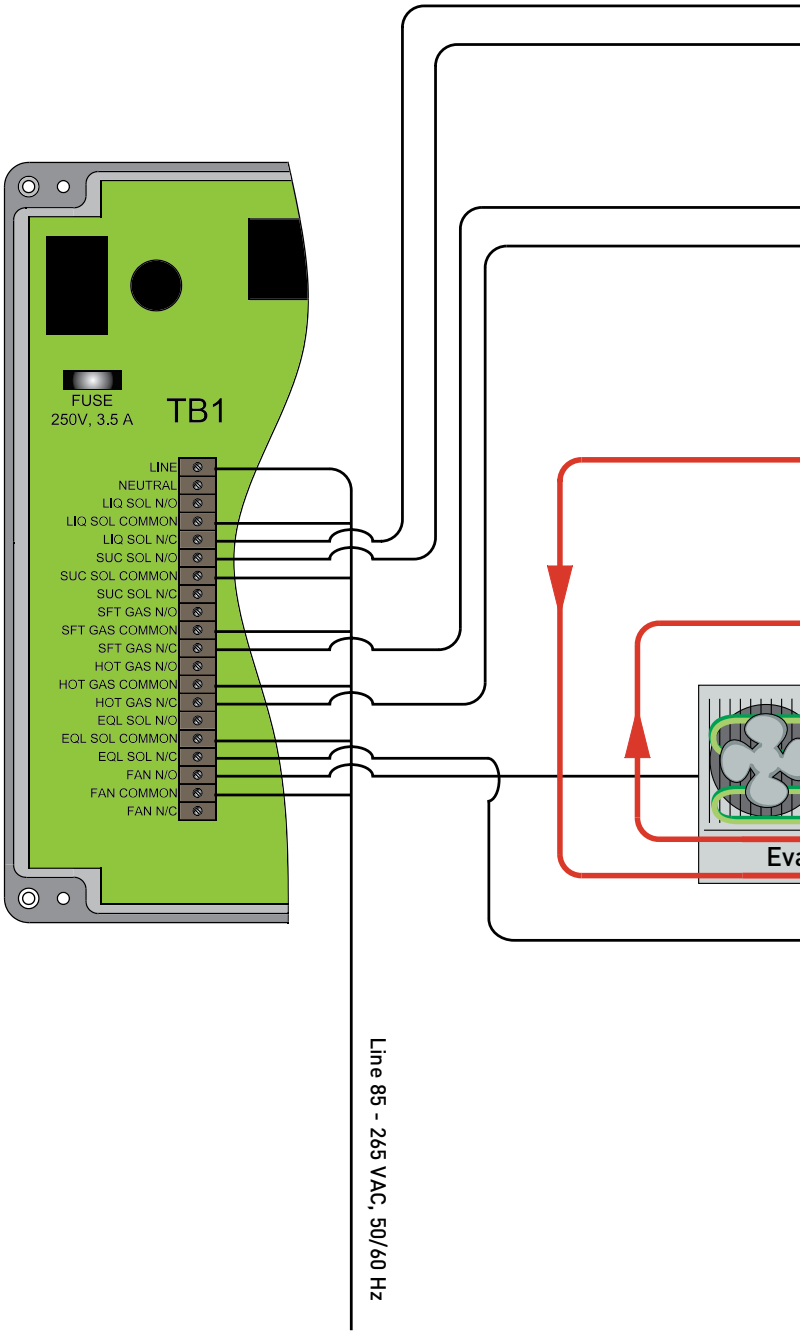

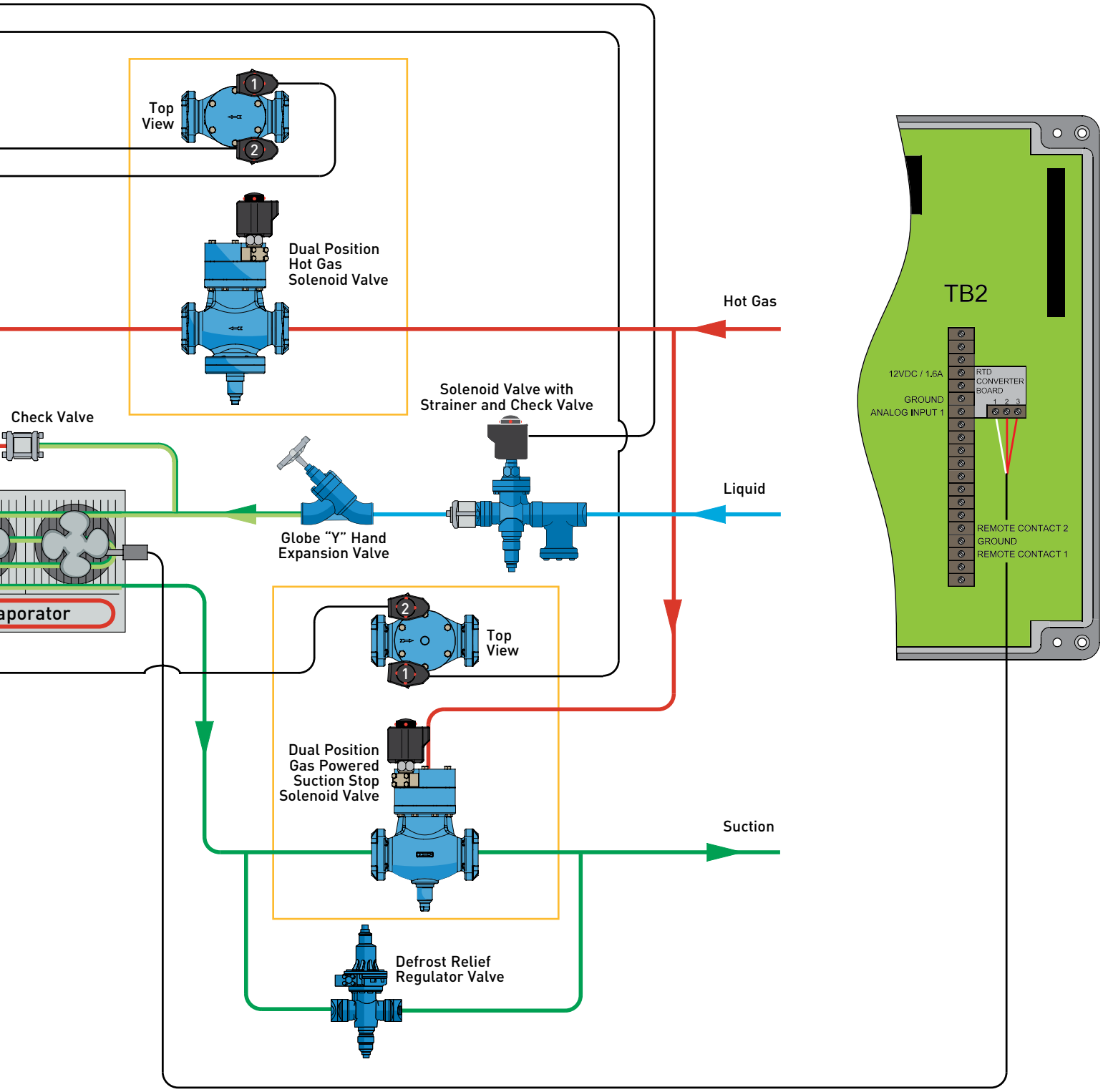
Top
View
1
2
Dual Position
Hot Gas
Solenoid Valve
Hot Gas
Check Valve
Solenoid Valve with
Strainer and Check Valve
Liquid
Globe "Y" Hand
Expansion Valve
aporator
Top
View
Dual Position
Gas Powered
Suction Stop
Solenoid Valve
Suction
Defrost Relief
Regulator Valve
TB2
12VDC / 1.6A
GROUND
ANALOG INPUT 1
RTD
CONVERTER
BOARD
1 2 3
REMOTE CONTACT 2
GROUND
REMOTE CONTACT 1

# Defrost Solutions ™ Liquid Recirculation Hot Gas Defrost, Bottom Feed

## Defrost Controller Wiring Diagram

In the top fed liquid recirculation hot gas defrost system shown, the suction stop solenoid valve and equalizing valve have been replaced with one dual position gas powered suction stop solenoid valve. The hot gas and soft gas solenoid valves have been replaced with one dual position hot gas solenoid valve. When the system is in defrost, the hot gas will flow through the piping in the drain pan, and into the suction line. Since the dual position gas powered suction stop solenoid valve and liquid solenoid valve have been fully closed by the defrost controller, the hot gas will flow in the reverse direction through the evaporator coil passing through the defrost relief regulator. The hot gas will then be routed downstream of the dual position gas powered suction stop solenoid valve.

***The Refrigerating Specialties Defrost Controller will go through the following sequence when initiating a defrost cycle.***

**Pump Out Cycle**: The first cycle consists of de-energizing the solenoid coil on the liquid line solenoid valve, closing it.

**Soft Gas Cycle:** In the second cycle, the evaporator fans are turned off and both solenoid coils #1 and #2 are energized on the dual position gas powered suction stop solenoid valve, causing it to fully close. Then the soft gas is initialized by energizing solenoid coil #2 on the dual position hot gas solenoid valve.

**Hot Gas Cycle:** The third cycle begins the full flow of hot gas by energizing solenoid coils #1 and #2 on the dual position hot gas solenoid valve, causing it to fully open.

**Equalization Cycle:** In the fourth cycle both solenoid coils #1 and #2 on the dual position hot gas solenoid valve are de-energized, causing the valve to fully close. Then solenoid coil #2 on the dual position gas powered suction stop solenoid valve is energized, starting the equalization cycle.

**Fan Delay Cycle:** In the final cycle, both solenoid coils #1 and #2 are de-energized on the dual position gas powered suction stop solenoid valve, causing it to fully open. The liquid solenoid valve is opened, resuming refrigeration. Once the time has expired for the user defined fan delay, the fans will resume operation.

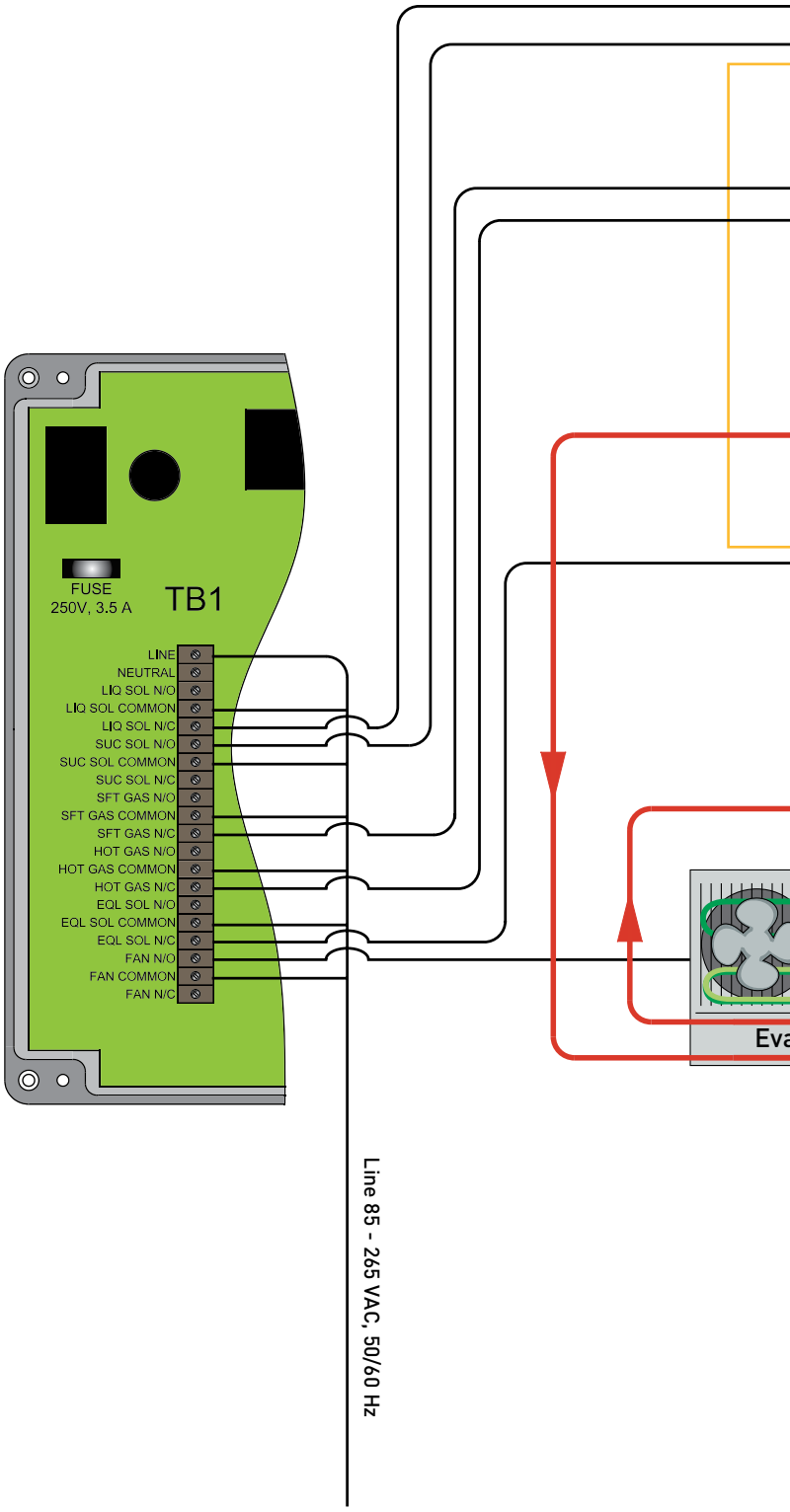

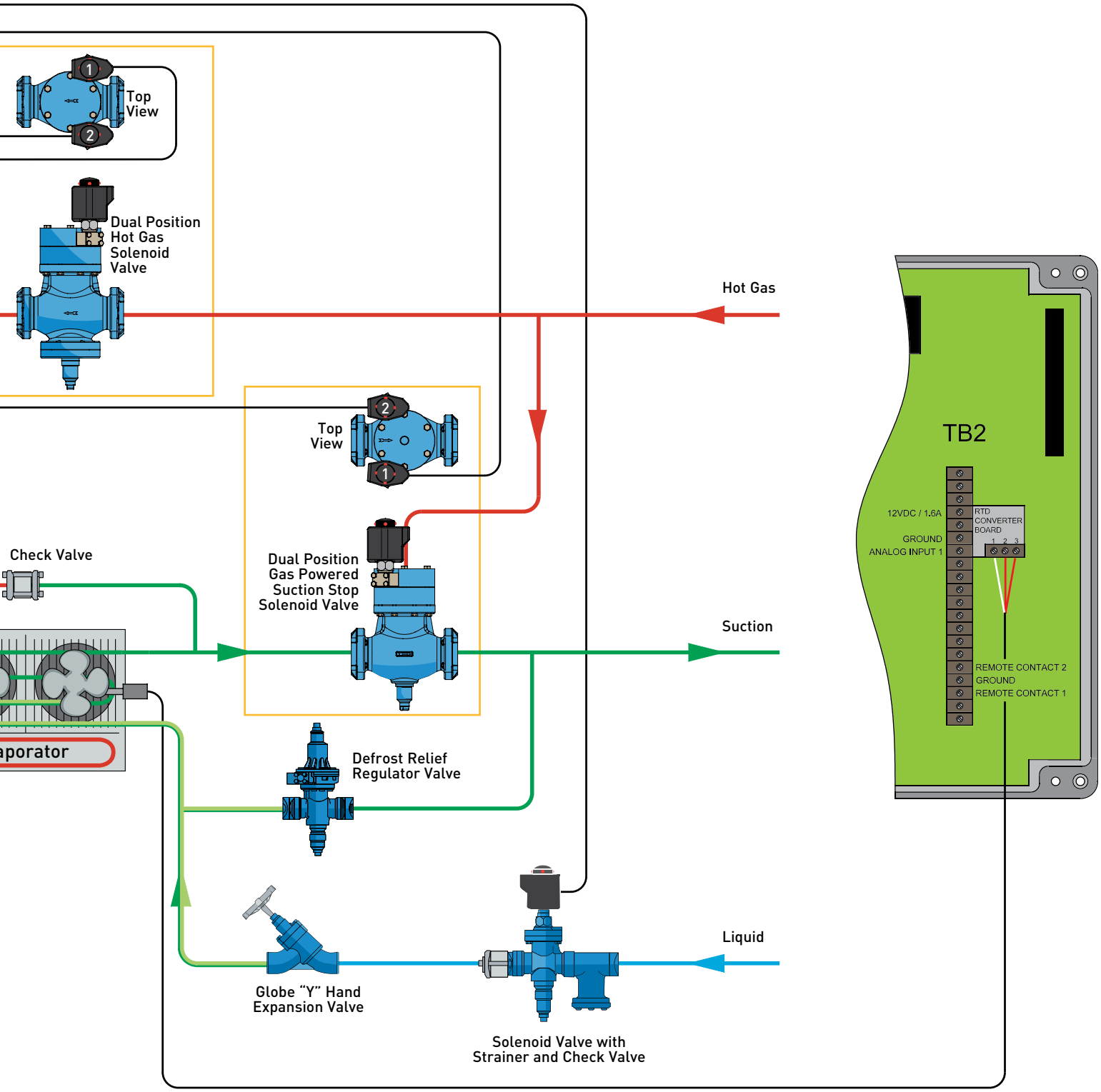
Top View
Dual Position Hot Gas Solenoid Valve
Hot Gas
Top View
Check Valve
Dual Position Gas Powered Suction Stop Solenoid Valve
Suction
aporator
Defrost Relief Regulator Valve
Liquid
Globe "Y" Hand Expansion Valve
Solenoid Valve with Strainer and Check Valve
TB2
12VDC / 1.6A
GROUND
ANALOG INPUT 1
RTD CONVERTER BOARD
1 2 3
REMOTE CONTACT 2
GROUND
REMOTE CONTACT 1

Parker Hannifin Corporation
**Refrigerating Specialties Division**
2445 South 25th Avenue
Broadview, Illinois 60155-3858 USA
phone 708 681 6300 • fax 708 681 6306

Parker Hannifin Corporation
**HERL Refrigerating Specialties Division**
Wankelstrasse 40
Cologne, Germany D-50996
phone +49 2236 39 00-0 • fax +49 2236 39 00-39
www.parker.com/refspec

Brochure R-222/03 2012